GRF Overlay BMF/WINE Door

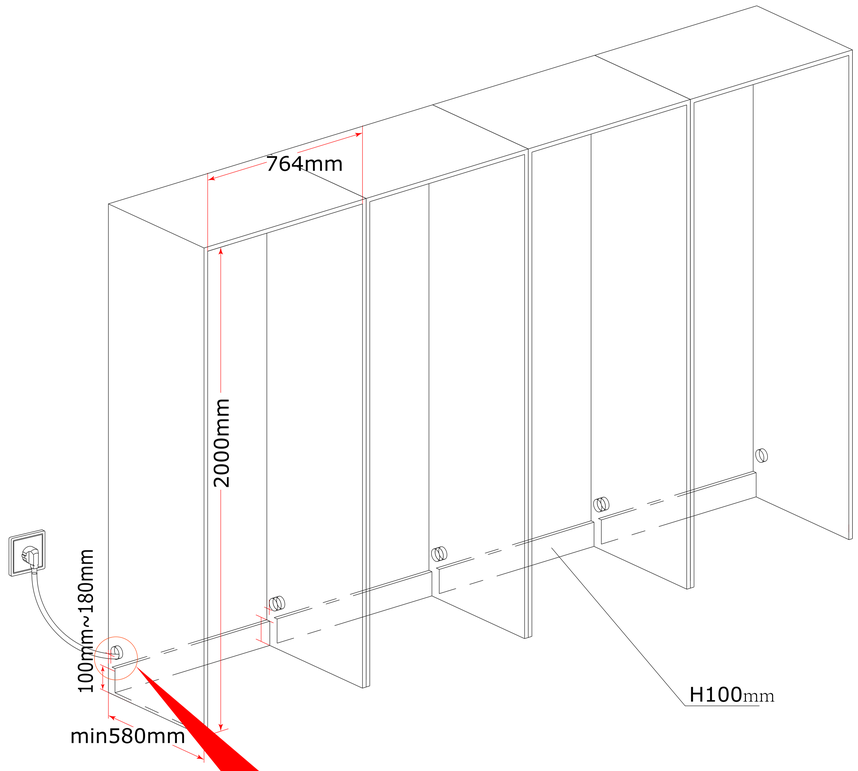

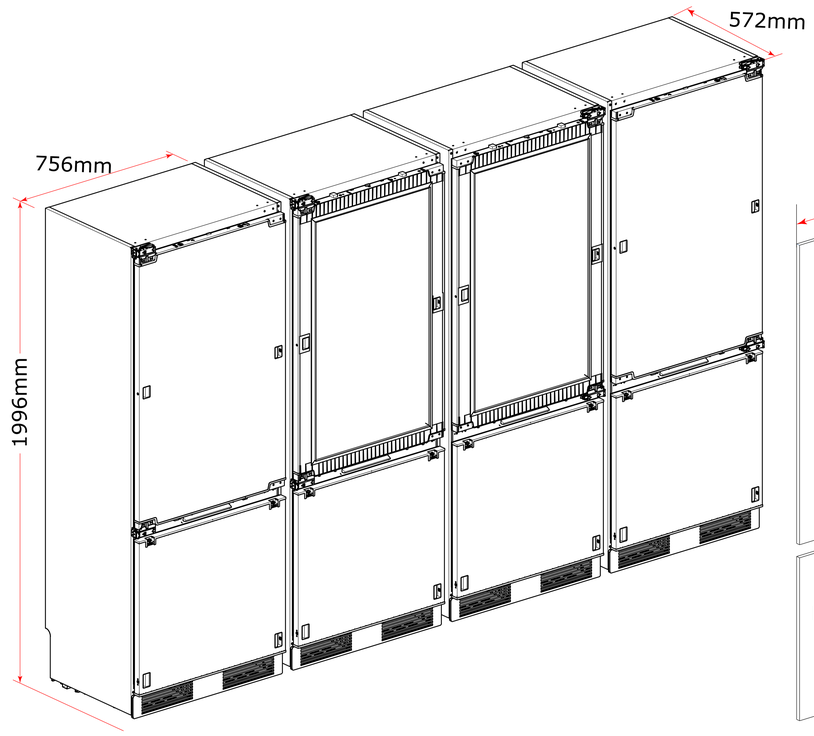

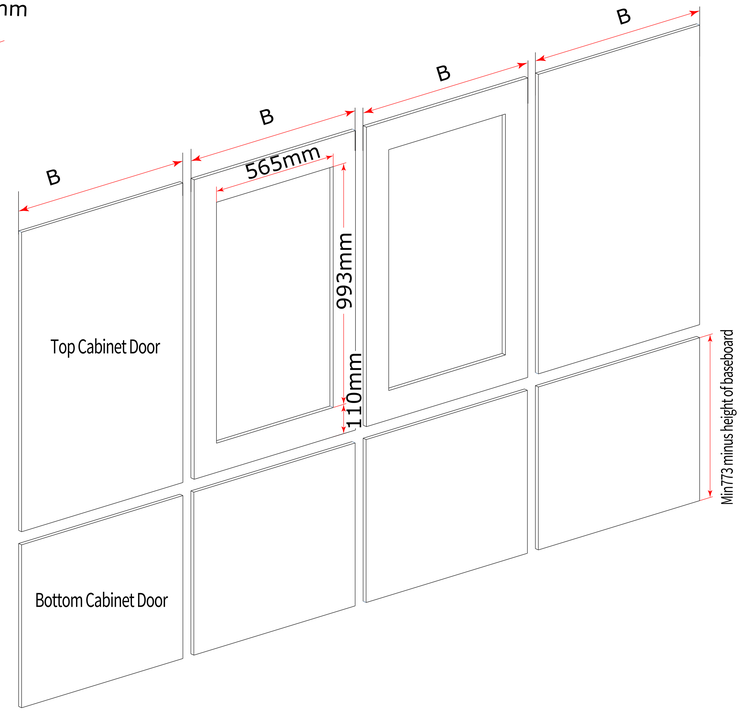

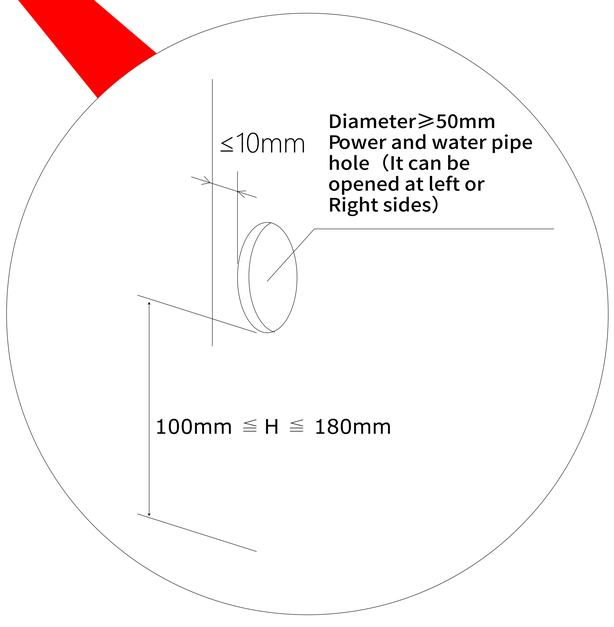

Cabinet Door panel thicknsee of A(mm)	Gap X（mm）	Cabinet Door panel widths of B（mm）	
		Case One	Case Two
16 - 22	4	796	795
23 - 25	4	796（R≥7）	795（R≥9）

EX: If the cabinet door panel thickness is 20mm,the gap should be 4mm,case one: cabinet door panel widths should be 796mm,;case two:cabinet door panel widths should be 795mm.

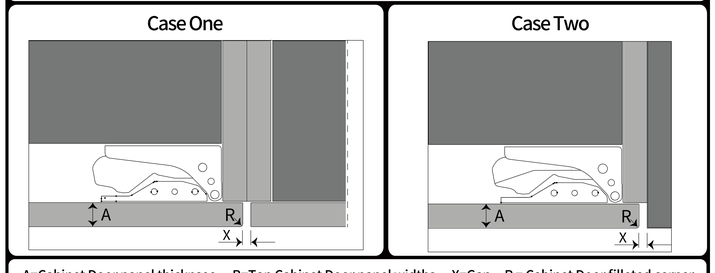

A=Cabinet Door panel thicknsee B=Top Cabinet Door panel widths X=Gap R = Cabinet Door filleted corner

Cabinet door panel requirements:

(1) The size of top cabinet door width is B,the height matches according to the cabinet,the wine cabinet door tapping size is 993*565mm，the tapping is centered，The distance between the bottom end and the bottom of the cabinet plate is 110mm.
(2) The door panel and the cabinet body are full overlay;
(3) The height of baseboard is between 80-120mm, otherwise the heat dissipation of the refrigerator will be affected;
(4) Power cables and water pipes can be opened on one side or both sides according to the actual situation.
(5) The power socket is in the adjacent cabinet.